2 System Design Theory

2.1 Automotive Conducted Transients

In automotive environment batteries are connected to various electronic control units, loads, and sensor and load systems. Due to several parameters, conducted transients are seen on power lines for electronic control units. A short overview of such electrical transients are shown in Figure 3.

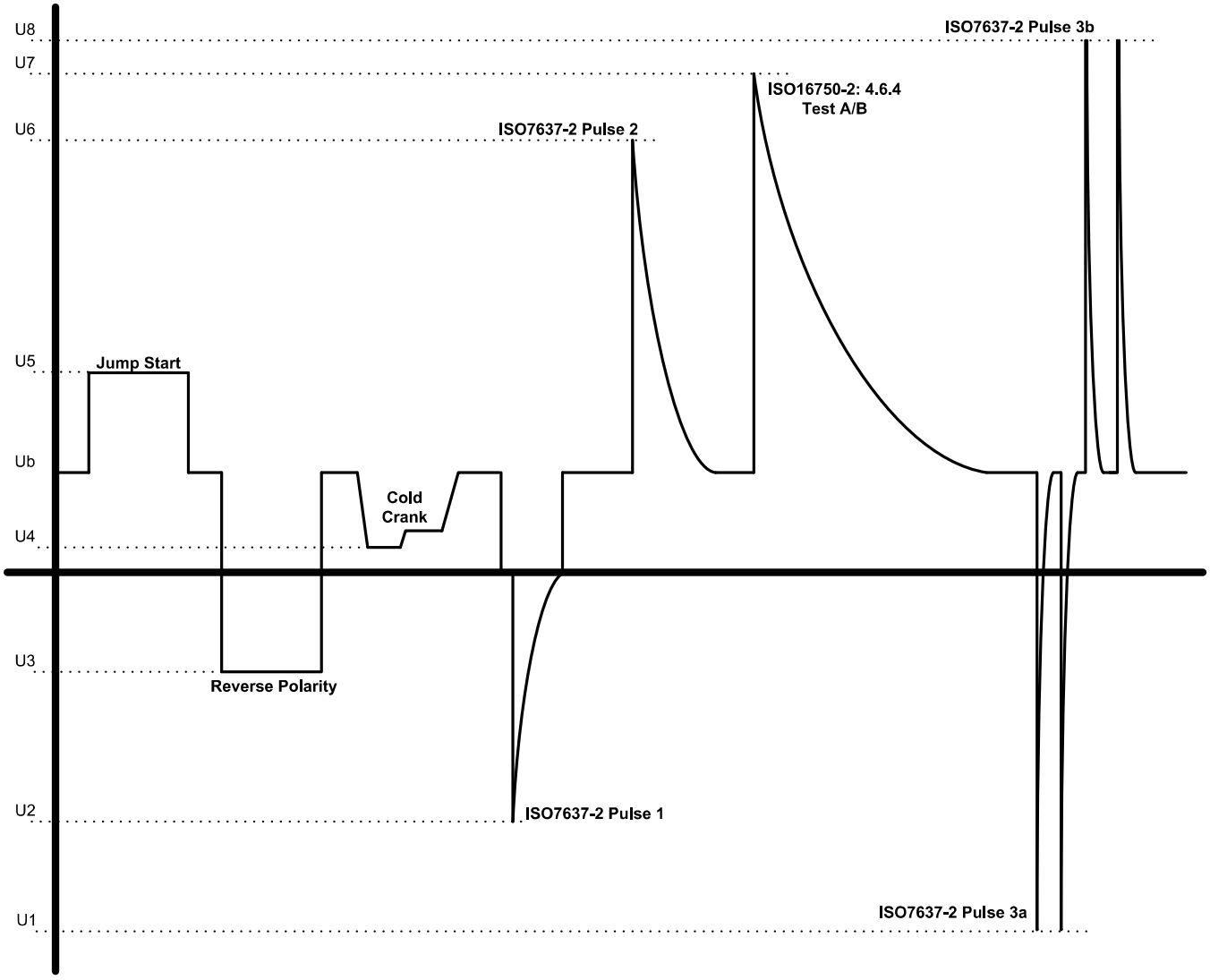

Figure 3. Overview of Transients

Table 2 provides the description, behavior, and impact of automotive power line electrical transients.

Table 2. List of Automotive Electrical Transients Standards

STANDARD OR SPECIFICATION	INSTITUTE OR COMPANY
ISO 7637-2	Road vehicles: Electrical disturbances from conduction and coupling
ISO 16750-2	Road vehicles: Environmental conditions and testing for electrical and electronic equipment
LV124	Group of OEMS (Audi, BMW, Porsche, VW, and so on)
SAEJ1113-11	USA Standard by the Society of Auto Engineers
JASO A-1	Japanese automobile standard

Copyright © 2016, Texas Instruments Incorporated

Specification of these standards are not limited to this list; auto manufacturers have their own internal standards. Although changes are typically only in a few parameters of different tests or limits, the essence of the requirements are the same.

ISO 7637 is titled *Road vehicles – Electrical disturbances from conduction and coupling*, and part 2 is specifically "Electrical transient conduction along supply lines only". The standard defines a test procedure, including the description of test pulses, to test the susceptibility of an electrical subsystem to transients, which could potentially be harmful to its operation. Each pulse is modeled to simulate a transient that could be created by a real event in the car. This design mainly focus for reverse polarity protection and ORing applications, which is predominantly placed next to battery.

ISO 16750 is titled *Road vehicles – Environmental conditions and testing for electrical and electronic equipment*, and part 2 is specifically "Electrical loads." An easy way to think of this standard is that it essentially defines a series of "supply voltage quality" events—variations of the battery supply voltage under various conditions. For the most part, these conditions are not harmful to the electrical subsystem, but can affect its state of operation. The tests in this standard are designed to see how the subsystem behaves before, during, and after these events.

2.1.1 ISO 7637-2 Pulse 1

This test is a simulation of transients due to supply disconnection from inductive loads. It is applicable to DUTs which, as used in the vehicle, remain connected directly in parallel with an inductive load.

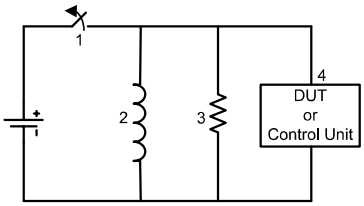

Copyright © 2016, Texas Instruments Incorporated

Figure 4. ISO 7637-2 Pulse 1

Key features include:

- Ignition switch and main relay or relevant
- Inductive load (relays, solenoids or motors, and so on)
- Load resistance (effective load on the power supply)
- Control unit or DUT (exposed to transients)
- Battery

Copyright © 2016, Texas Instruments Incorporated

Pulse 1 occurs when switch(1) is open. The pulse itself, simulating an inductive kick in a parallel system, is a high voltage, negative-going transient. The waveform and its parameters are given in Figure 5 and Table 3:

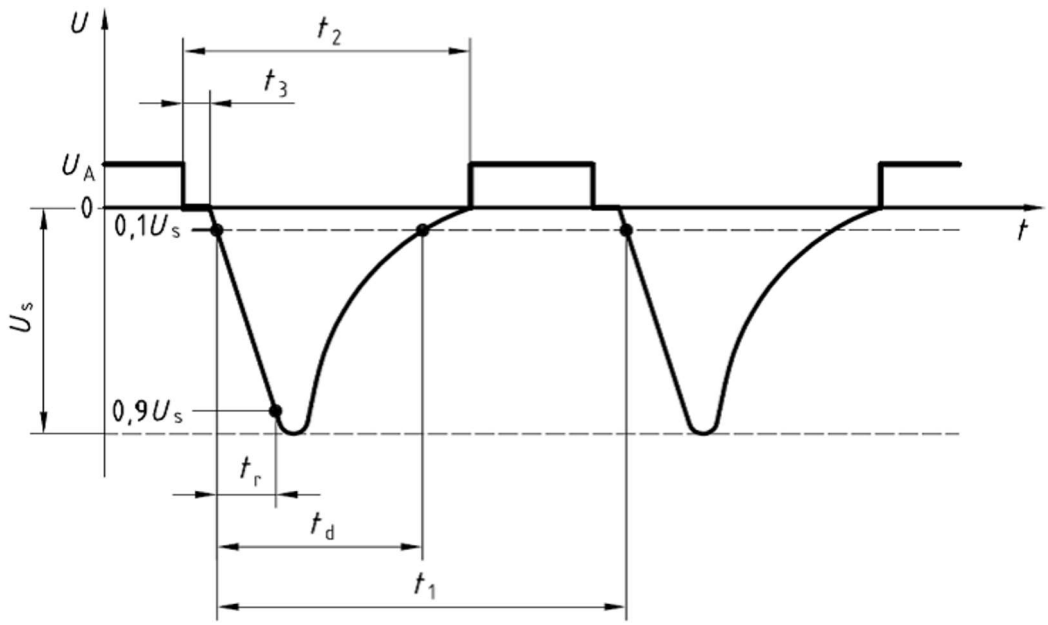

Figure 5. ISO 7637-2 Pulse 1 Waveform

Table 3. ISO 7637-2 Pulse 1 Parameters

PARAMETER	12-V SYSTEM	24-V SYSTEM
U_S	–75 to –100 V	–450 to –600 V
R_i	10 Ω	50 Ω
t_d	2 ms	1 ms
t_r	$\left(1^{0}_{-0.5}\right)$µs	$\left(3^{0}_{-1.5}\right)$µs
t_1 (1)	0.5 to 5 s	
t_2	200 ms	
t_3 (2)	< 100 µs	

(1) t1 must be chosen such that the DUT is correctly initialized before the application of the next pulse.
(2) t3 is the smallest possible time necessary between the disconnection of the supply source and the application of the pulse.

Pulse specification and parameters might vary based on OEM and vehicle configuration.

Copyright © 2016, Texas Instruments Incorporated

2.1.2 ISO 7637-2 Pulse 2a

Pulse 2a simulates transients due to sudden interruption of currents in a device connected in parallel with DUT due to inductance of the wiring harness.

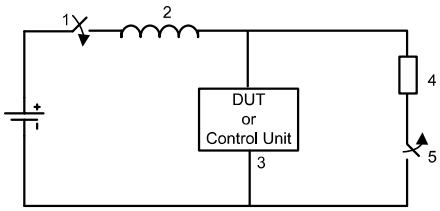

Copyright © 2016, Texas Instruments Incorporated

Figure 6. ISO 7637-2 Pulse 2a Simulation Picture

Key features include:

- Ignition switch and main relay or relevant
- Inductance (wiring harness)
- Control Unit or DUT (exposed to transients)
- Load resistance (effective load on the power supply)
- Load switch
- Battery

The pulse itself, simulating an inductive kick from the wiring harness, is a high-voltage, positive-going transient. The waveform and its parameters are given in Figure 7 and Table 4:

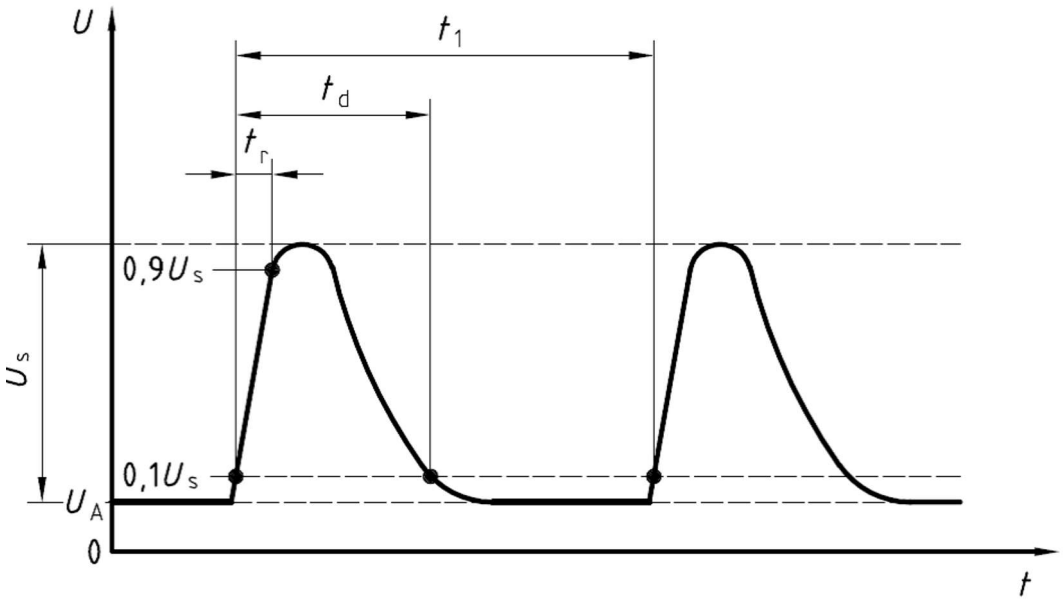

Figure 7. ISO 7637-2 Pulse 2a Waveform

Copyright © 2016, Texas Instruments Incorporated

Table 4. Pulse 2a Parameters

PARAMETER	12-V SYSTEM	24-V SYSTEM
U_S	37 to 50 V	
R_i	2 Ω	
t_d	0.05 ms	
t_r	$\left(1^{0}_{-0.5}\right)\mu s$	
t_1 (1)	0.2 to 5 s	

(1) The repetition time t_1 can be short, depending on the switching. The use of a short repetition time reduces the test time.

Pulse specification and parameters might vary based on OEM and vehicle configuration.

2.1.3 ISO 7637-2 Pulses 3a and 3b

These test pulses are a simulation of transients, which occur as a result of the switching processes. The characteristics of these transients are influenced by distributed capacitance and inductance of the wiring harness.

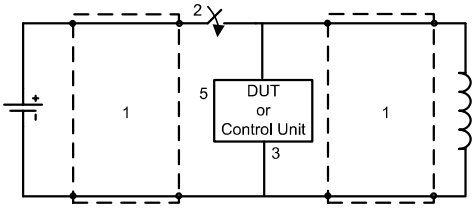

Copyright © 2016, Texas Instruments Incorporated

Figure 8. ISO 7637-2 Pulse 3a and 3b Simulation Picture

Key features include:

- Wiring harness with distributed inductance and capacitance
- Ignition switch and main relay or relevant
- Control Unit or DUT (exposed to transients)
- Inductive load (relays, solenoids or motors, and so on)
- Battery

Pulse 3a is seen in control unit or DUT when supply is turned ON or load is switched before the control unit. A burst of negative arching transients are seen due to relay on and off.

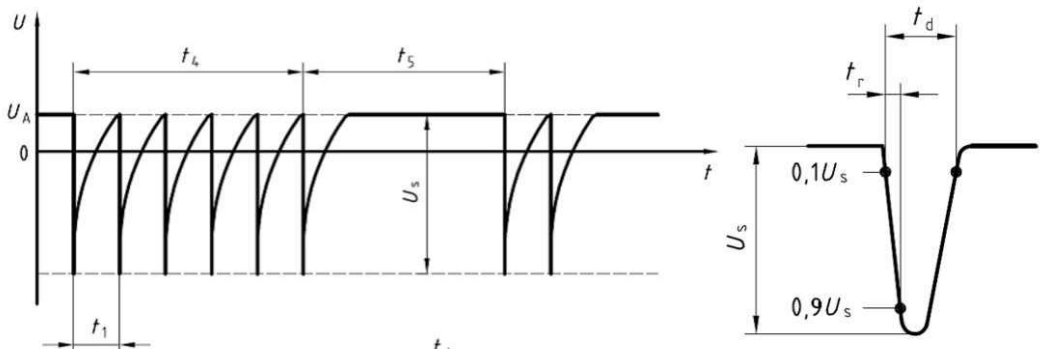

Figure 9. ISO 7637-2 Pulse 3a Waveform

Copyright © 2016, Texas Instruments Incorporated

Table 5. ISO 7637-2 Pulse 3a Parameters

PARAMETER	12-V SYSTEM	24-V SYSTEM
U_S	112 to 150 V	150 to 200 V
R_i	50 Ω	
t_d	$\left(0.1^{+0.1}_{0}\right)\mu s$	
t_r	5 ns ± 1.5 ns	
t_1	100 µs	
t_4	10 ms	
t_5	90 ms	

Pulse 3a is seen in control unit or DUT when load is switched after the control unit. A burst of positive arching transients are seen due to relay on and off.

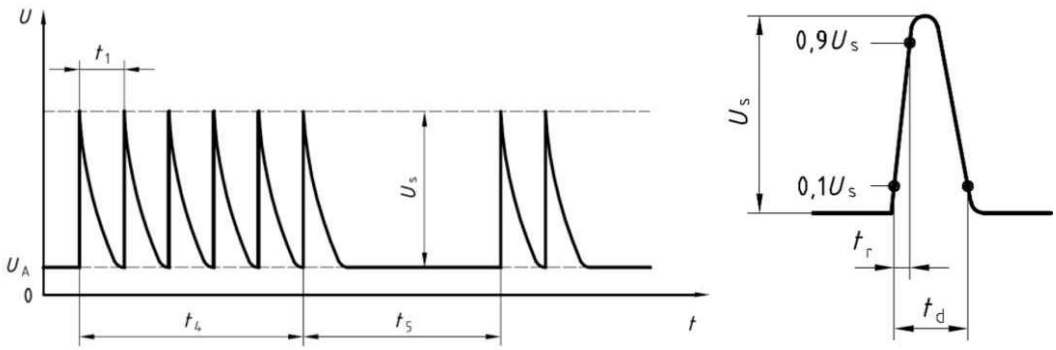

Figure 10. ISO 7637-2 Pulse 3b Waveform

Table 6. ISO 7637-2 Pulse 3b Parameters

PARAMETER	12-V SYSTEM	24-V SYSTEM
U_S	75 to 100 V	150 to 200 V
R_i	50 Ω	
t_d	$\left(0.1^{+0.1}_{0}\right)\mu s$	
t_r	5 ns ± 1.5 ns	
t_1	100 µs	
t_4	10 ms	
t_5	90 ms	

Pulse specification and parameters might vary based on OEM and vehicle configuration.

Copyright © 2016, Texas Instruments Incorporated

2.1.4 ISO 16750-2 4.6.4 Load Dump

This test is a simulation of load dump transient, occurring in the event of a discharged battery being disconnected while the alternator is generating charging current and with other loads remaining on the alternator circuit at this moment. Load dump may occur on account of a battery being disconnected as a result of cable corrosion, poor connection or of intentional disconnection with the engine running. This pulse was actually moved from ISO 7637 to ISO 16750.

The actual load dump event is extremely high energy and high voltage, which would be very difficult (and expensive) to protect against on every subsystem in the vehicle. Instead, every OEM installs a clamping circuit to the alternator, which limits the voltage to a more manageable level for the subsystem. This clamped voltage varies from OEM to OEM, but is typically in the range of 30 to 40 V.

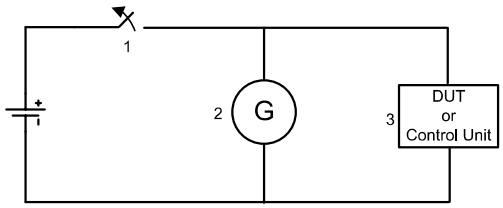

Copyright © 2016, Texas Instruments Incorporated

Figure 11. ISO 16750-2 Test A Simulation Picture

Key features include:

- Battery connection (loose contact or disconnection)
- Alternator with internal clamping
- Control Unit or DUT (exposed to transients)
- Battery

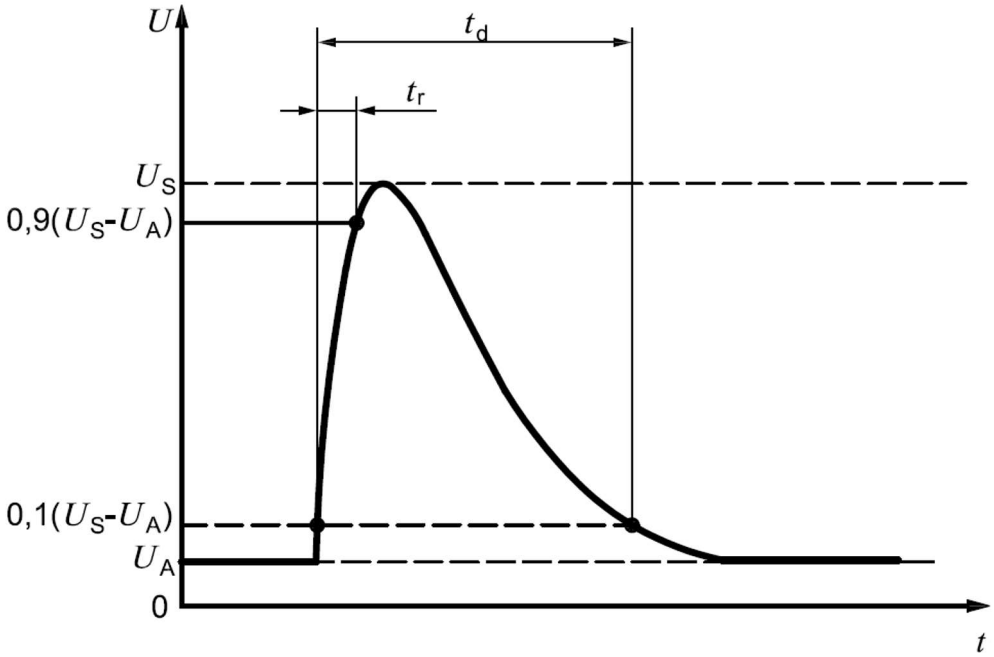

Figure 12. ISO16750-2 Test A Waveform (Without Centralized Load Dump)

Copyright © 2016, Texas Instruments Incorporated

Table 7. ISO16750-2 4.6.4.2.1 Test A Parameters

PARAMETER	TYPE OF SYSTEM	
	U_N = 12 V	U_N = 24 V
U_S (V)	$79 \le U_S \le 101$	$151 \le U_S \le 202$
R_i (Ω)	$0.5 \le R_i \le 4$	$1 \le R_i \le 8$
t_d (ms)	$40 \le t_d \le 400$	$100 \le t_d \le 350$
t_r (ms)	$10\left(^{0}_{-5}\right)$	

Pulse specification and parameters might vary based on OEM and vehicle configuration.

2.1.5 ISO 16750-2 4.7 Reverse Voltage

This test checks the ability of a control unit to withstand against the connection of a reversed battery when using an auxiliary starting device. During the service or while repairing the car, there is a possible risk of mis wire or wrong connections of system wiring harness to battery. In such case electronic control units needs to have protection for reverse battery voltage.

In automotive systems, the alternator is directly connected to battery without any fuse. Rectifier diodes in the alternator can withstand the reverse voltage for 60 s. If the diodes in alternator are damaged, then there is a scope for damage of wires and possible fire inside the system. Once the fuses or alternator are replaced, the rest of the devices are expected to run with class A. So the control units are expected to withstand the reverse voltage for at least 60 s ± 6 s.

Table 8. ISO16750-2 Reverse Voltage Parameters

NOMINAL VOLTAGE U_N (V)	TEST VOLTAGE U_A (V)
12	14
24	28

Pulse specification and parameters might vary based on OEM and vehicle configuration.

Copyright © 2016, Texas Instruments Incorporated

3 Getting Started Hardware

3.1 Undervoltage (V_{IN} < 5 V)

When the battery voltage is less than 5 V, the LM5060-Q1 is in undervoltage mode, and the gate voltage will be pulled to ground. Q1 and Q2 will remain in OFF state. In an automotive environment, the UVLO state is not widely used as it is not included as feature of this design. The UVLO pin connected directly to the input pin. The LM5060-Q1 will start functioning once input voltage is above 1.6 V (UVLO threshold voltage).

In an automotive environment, typical batteries used for supply are 12 V, 24 V, and 48 V. In normal operation, the LM5060-Q1 will always remains in an ON state. Methods and mechanism to support cold crank conditions will be explained in Section 3.4.

3.2 Normal Operation (5 V ≤ V_{IN} ≤ 75 V)

If the enable pin is high and input voltage is less than the overvoltage threshold, then the gate of the LM5060-Q1 will turn on Q1 and Q2. Output voltage follows the input voltage with a voltage drop across Q1 and Q2 as shown in Figure 13.

$$V_{OUT} = V_{IN} - \left(R_{DS(on)_Q1} + R_{DS(on)_Q2}\right) \times I_{LOAD} \quad (1)$$

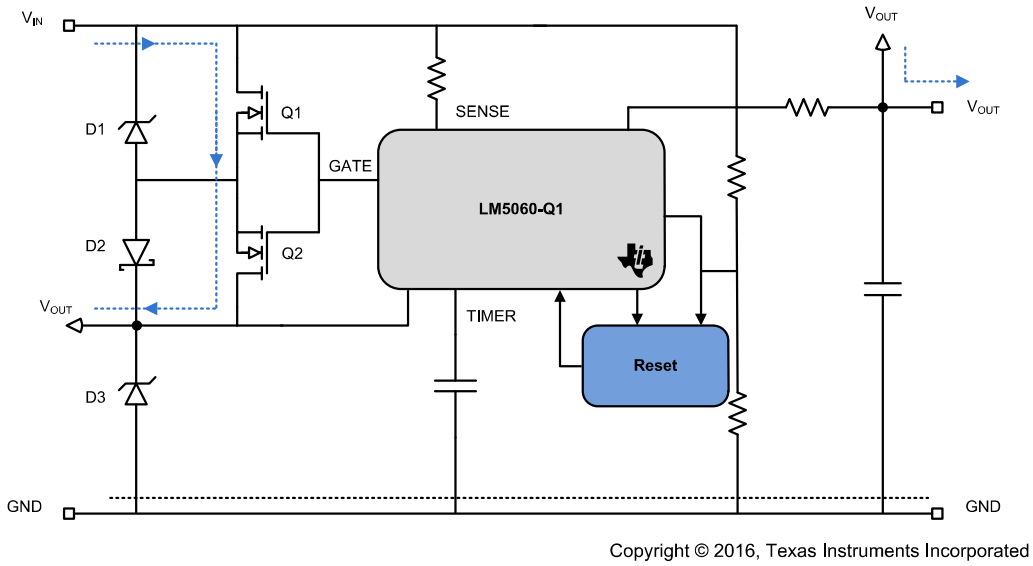

Figure 13. Normal Behavior

3.3 Transient Suppression

Transient suppression is a critical part for automotive input protection. As mentioned in Section 2.1, there are different types of transients that need to be handled at the battery input. There is a need to have a common topology to support various automotive input protection requirements. Load dump typically describes input protection. In most automotive cases, the load dump pulse is handled in the alternator. During the service or repairs, there is a scope and chance to replace the current alternator with a low-cost solution. Low-cost alternators might have different specification or no load dump protection, which might leads to damage of electronics.

Copyright © 2016, Texas Instruments Incorporated